RoHS

REV.	ECN NO.	LOCAS.	DESCRIPTION	DATE	DESIGN
A			NEW DRAWING	22.12.01	Jenply

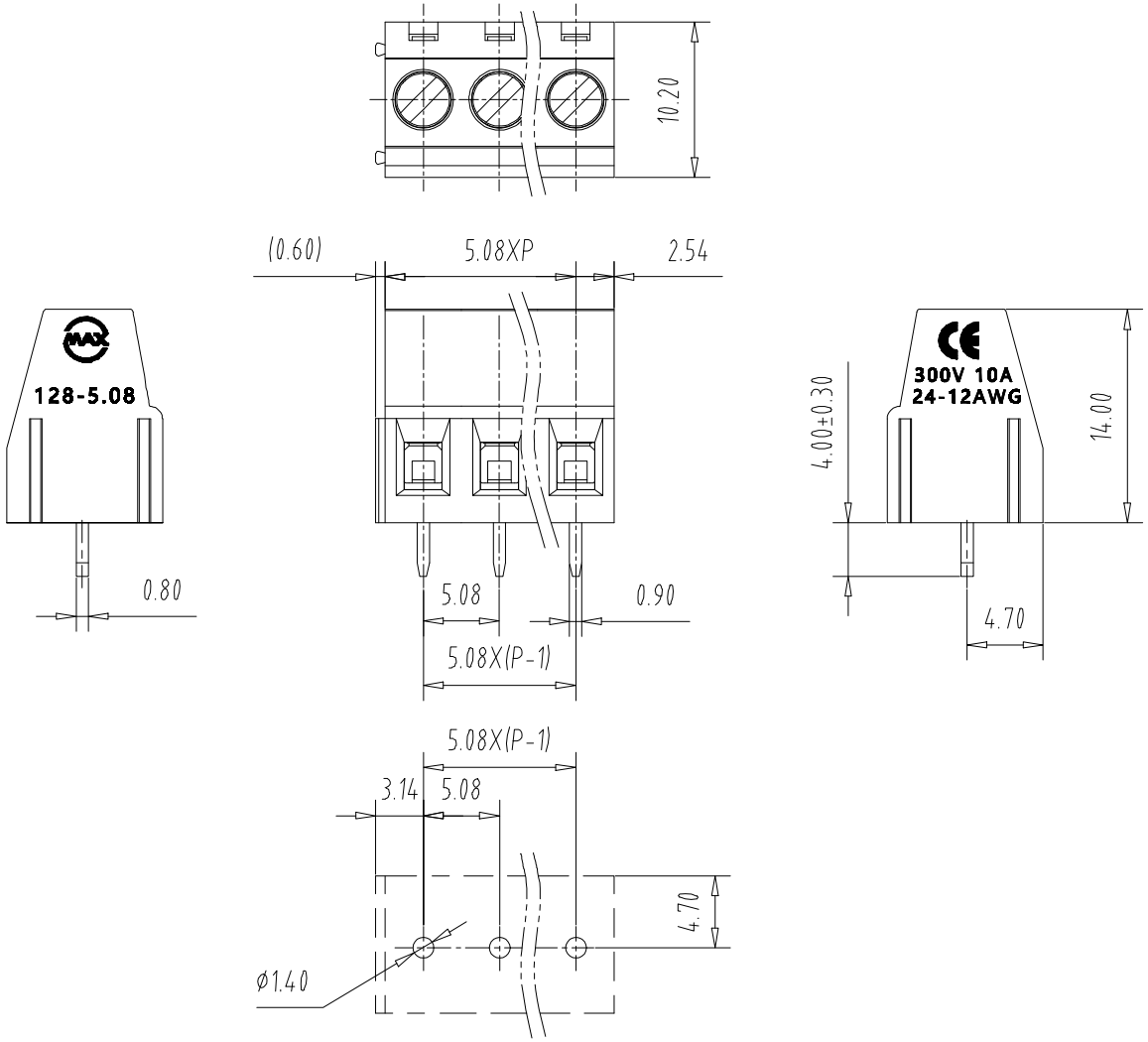

PCB Layout

NOTES1:

UL Standard

1.Rating voltage/current: 300V/10A

2.withstanding voltage: AC2000V/1Min

3.Torque value: M2.5, 3.54Lb.in

4.Wire range: 24～12AWG

IEC Standard

1.

Pollution Degree	3	2	2
Overvoltage Category	Ⅲ	Ⅲ	Ⅱ
Rate Impulse Voltage(KV)	4	4	4
Rate Voltage(V)	250V	400V	630V
Rate Current(A)	18A	18A	18A

2. Torque value: M2.5, 0.4Nm

3.wire range: 0.2-2.5mm²

NOTES2:

1.Housing: PA66(UL94V-0)

2.Solder Pin: Brass(Sn Plated)

3.Cage: Brass(Ni Plated)

4.Screw: Steel(M2.5,Zn Plated)

NOTES3:

1.Pitch: 5.08mm Poles: 02-24P

2.Stripping length: 6-7mm

3.Operating temperature: -40℃～+105℃

4.RoHS Compliance

How to order

MX128 - 5.08 - XXP

Factory Code — poles

Pitch Range In mm			Nominal Dimension Range In mm					— ⌒ ▱
TO 6	Over 6 TO 10	Over 10 TO 24	TO 30	Over 30 TO 60	Over 60 TO 100	Over 100 TO 150	Over 150	0.1/10
								∠
±0.15	±0.20	±0.30	±0.30	±0.50	±0.70	±1.00	±1.30	±2°

DESIGN:	Jenply		
CHECK:	Ke Tian		
APPROVED:	Youquan Xu		
DIM	TOL	DIM	TOL
X.	±0.25		
X.X	±0.20	X°.	±3.0°
X.XX	±0.15	X.X°	
X.XXX		X.XX°	
		X.XXX°	

QWYCONN® 深圳市启威源电子有限公司 SHENZHEN QIWEIYUAN ELECTRONIC CO.,LTD.

TITLE: 128-5.08-XXP

PART NO.

REV.A | SCALE: N/A | UNIT: mm | SHEET: 1/1